IF IN DOUBT ASK

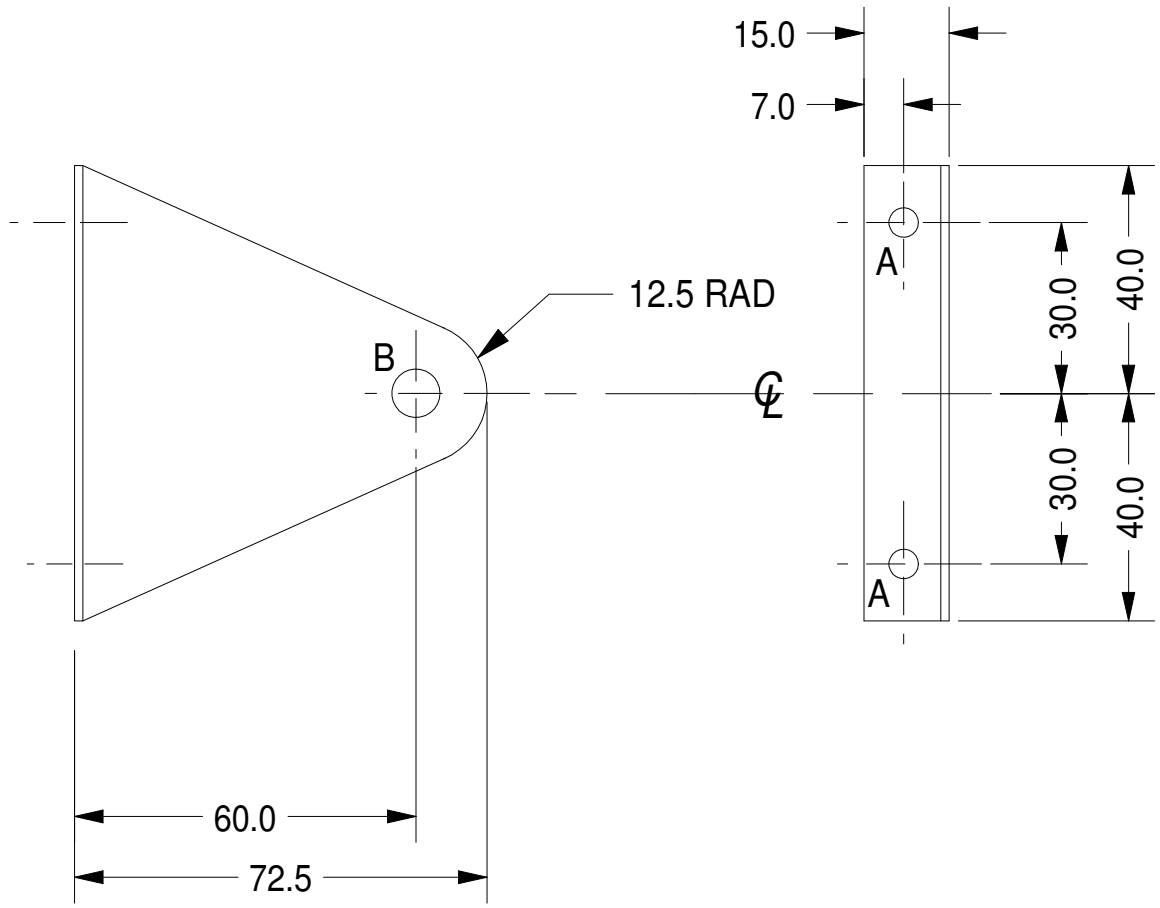

HOLE DATA TABLE

REF	DESCRIPTION	QTY
A	DRILL DIA 5.2 THRO'	2
B	DRILL DIA 8.5 THRO'	1

ISSUE	REVISION	SIG	DATE
1	NEW DRAWING	AR	26.11.07

MATERIAL

16swg MILD STEEL

FINISH

PAINT BLACK SEMI-GLOSS

TOLERANCES	
METRIC	
X	± 0.4
X.X	± 0.2
X.XX	± 0.1
X.XXX	± 0.05
ANGLES	± 0.5

REMOVE ALL SHARP EDGES AND BURRS. ALL DIMENSIONS IN MM
M/C WHERE SHOWN THUS
PART MARK DRG. No. & ISSUE WHERE SHOWN THUS
3RD ANGLE PROJECTION

DRAWN	DATE	CHKD
A.ROBBINS	26.11.07	RK

THIS DRAWING OR PART THEREOF MUST NOT BE COPIED
OR REPRODUCED WITHOUT PRIOR WRITTEN PERMISSION

LONDON ELECTRONICS LTD
Tel: 01767 626444

© 2005

TITLE

WALL BRACKET

DRAWING No. 9000-1734

ISSUE 1

SHEET 1 OF 1 SHEETS

A3